ISSUE 1
10/24/07

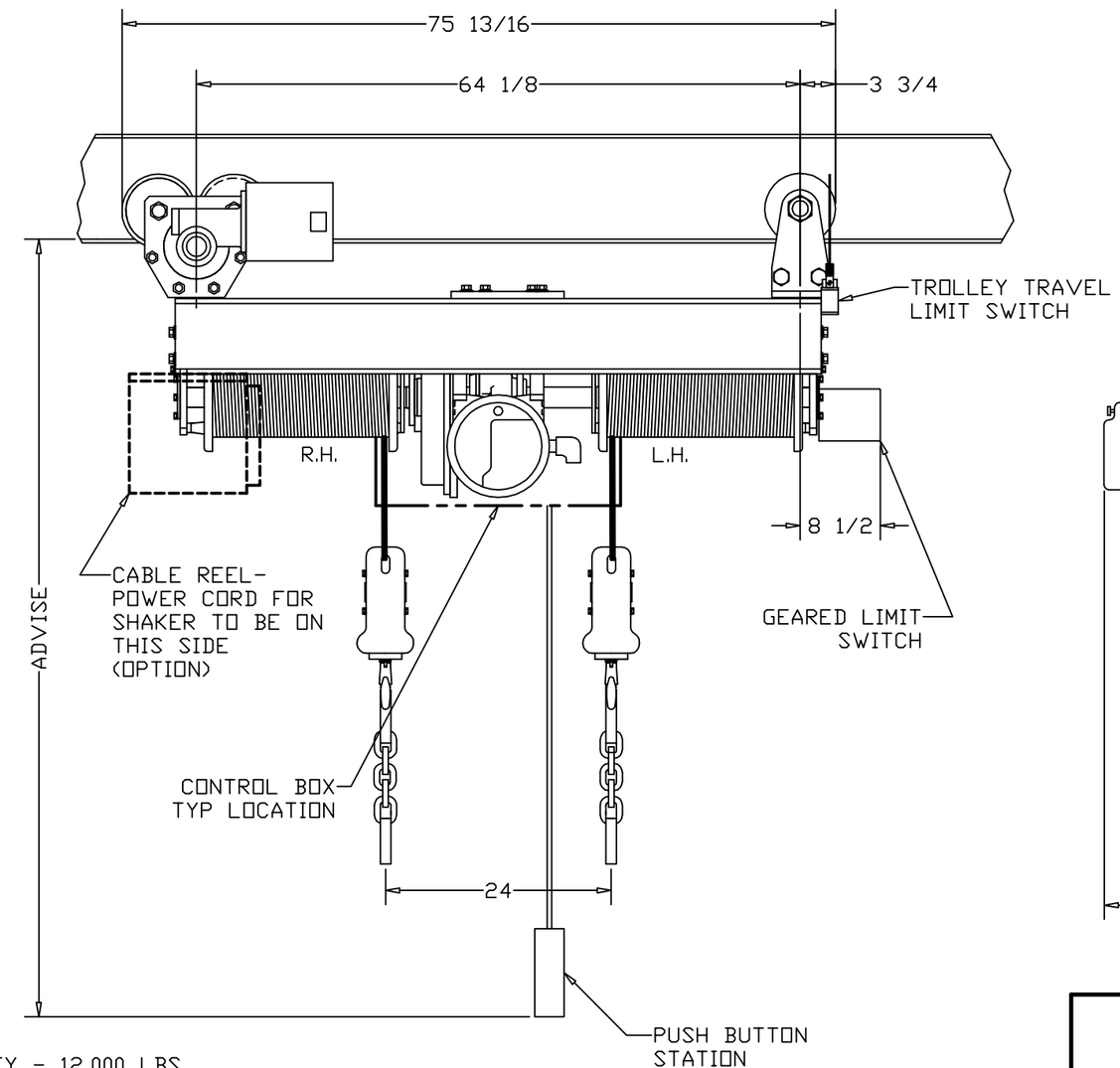

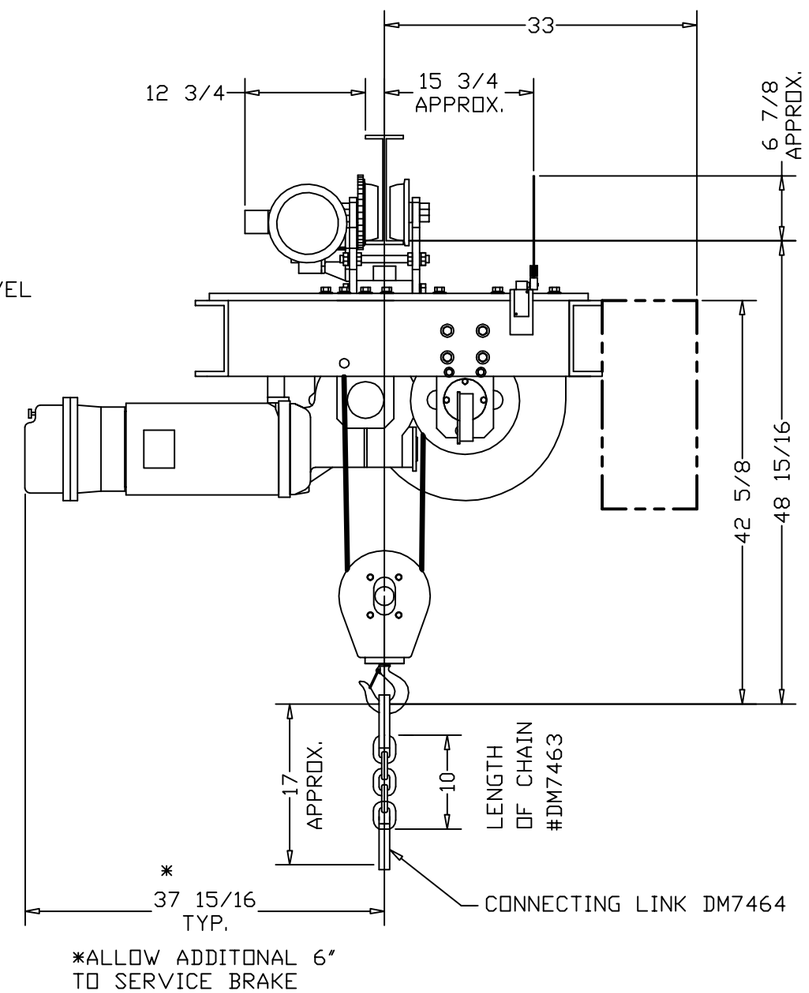

CAPACITY - 12,000 LBS
SPEED - 12 FPM
LIFT - 40 FT
REEVING - 2 PART SINGLE
PRIMARY VOLTAGE - 460/3/60
SECONDARY VOLTAGE - 115/1/60
HOIST MOTOR FLA - 10.1A
TROLLEY MOTOR FLA - 1.5A
HOIST BRAKE CURRENT RATING - .2A

ELECTROLIFT

ELECTROLIFT, INC.
204 SARGEANT AVE.
CLIFTON, NJ 07013
PH: 973-471-0204
FAX: 973-471-2814
www.electrolift.com

REV.	ECO#	DATE	BY:

HOIST TYPE: BC-3P CAR SHAKER

CONFIGURATION: SIDE DRIVE TROLLEY
CLASS II, DIV. I, GROUP F

DATE:	SCALE:	DWG SIZE:	DRAWN BY:
10/24/07	1/16	B	AR

CATALOG NO.:	DRAWING NO.:
869-SD	CS-105