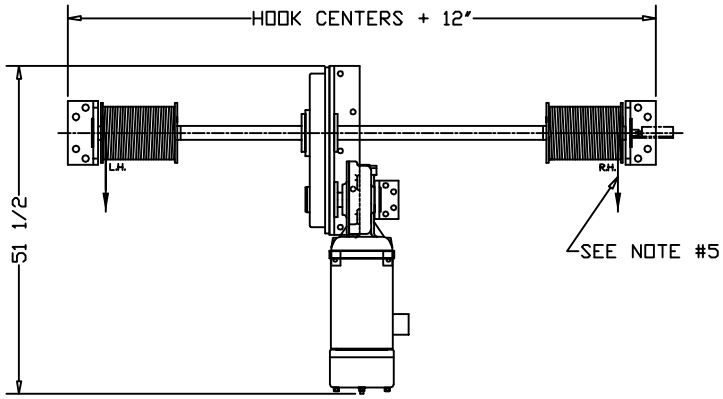

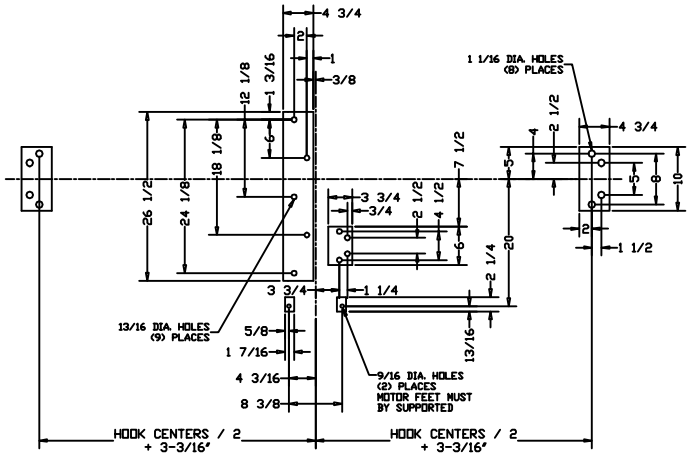

HOIST MOUNTING DETAIL
HOLE LOCATIONS

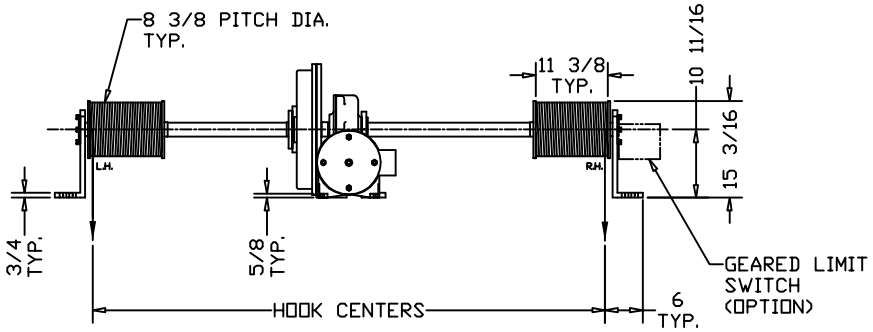

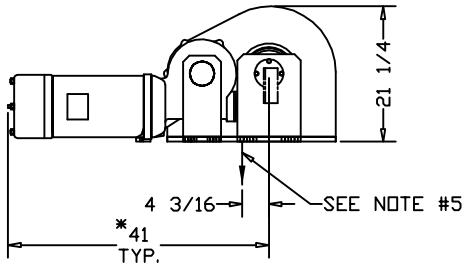

*ALLOW 6" CLEARANCE
TO SERVICE BRAKE

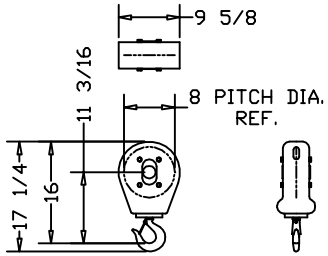

M-2538-A HOOK BLOCK
6000 LB. CAPACITY
8" PITCH DIA.
(2) SUPPLIED PER HOIST STD.
SHIPPED LOOSE

	CATALOG #			
	934-FL	–	–	–
SPEED (FPM):	13	–	–	–
HP:	6-1/2	–	–	–
MAX. HOOK CENTERS (IN.): (SEE NOTE #4)	120	–	–	–
LIFT (FT.):	20			
CAPACITY (LBS):	10000			
PRIMARY VOLTAGE:	460 or 230 (3 PH. STD)			
CONTROL VOLTAGE:	115 (STD)			
HOIST WEIGHT (LBS):	1750			
REEVING:	2 PART SINGLE			

HOIST NOTES:
1. STANDARD CONTROL BOX WILL BE SHIPPED LOOSE WITH HOIST, TO BE MOUNTED BY CUSTOMER.
2. CONTROL BOX SIZE TO BE DETERMINED UPON CONTROLS SELECTION AT TIME OF ORDER.
3. ALL ELECTRICAL CONNECTIONS BETWEEN HOIST AND CONTROL BOX TO BE COMPLETED BY CUSTOMER, UNLESS OTHERWISE SPECIFIED.
4. FOR HOOK CENTERS LARGER THAN SPECIFIED MAXIMUM VALUE (SEE ABOVE), CONTACT ELECTROLIFT.
5. WIRE ROPE CAN PAY OFF OPPOSITE SIDE OF DRUM, IF SPECIFIED.
6. FOR SINGLE LINE APPLICATIONS, SPEED AND LIFT WILL BE TWICE THE SPECIFIED VALUE AND THE CAPACITY WILL BE HALF THE SPECIFIED VALUE.
7. WIRE ROPE DEAD ENDING TO BE PROVIDED BY CUSTOMER

ELECTROLIFT
ELECTROLIFT, INC.
204 SARGEANT AVE.
CLIFTON, NJ 07013
PH: 973-471-0204
FAX: 973-471-2814
www.electrolift.com

REV.	ECO#	DATE	BY:

HOIST TYPE: "BC-3P" TWIN HOOK

CONFIGURATION: FLOOR MOUNTED

DATE:	SCALE:	DWG SIZE:	DRAWN BY:
8/24/04	1:20	B	AR

CATALOG NO.: 934-FL

DRAWING NO.: BC-142

CUSTOMER:

REFERENCE NO.:

ELECTROLIFT AUTHORIZED DISTRIBUTOR: