# 5" PITCH DIAMETER SHEAVE & BRACKET ASSEMBLY

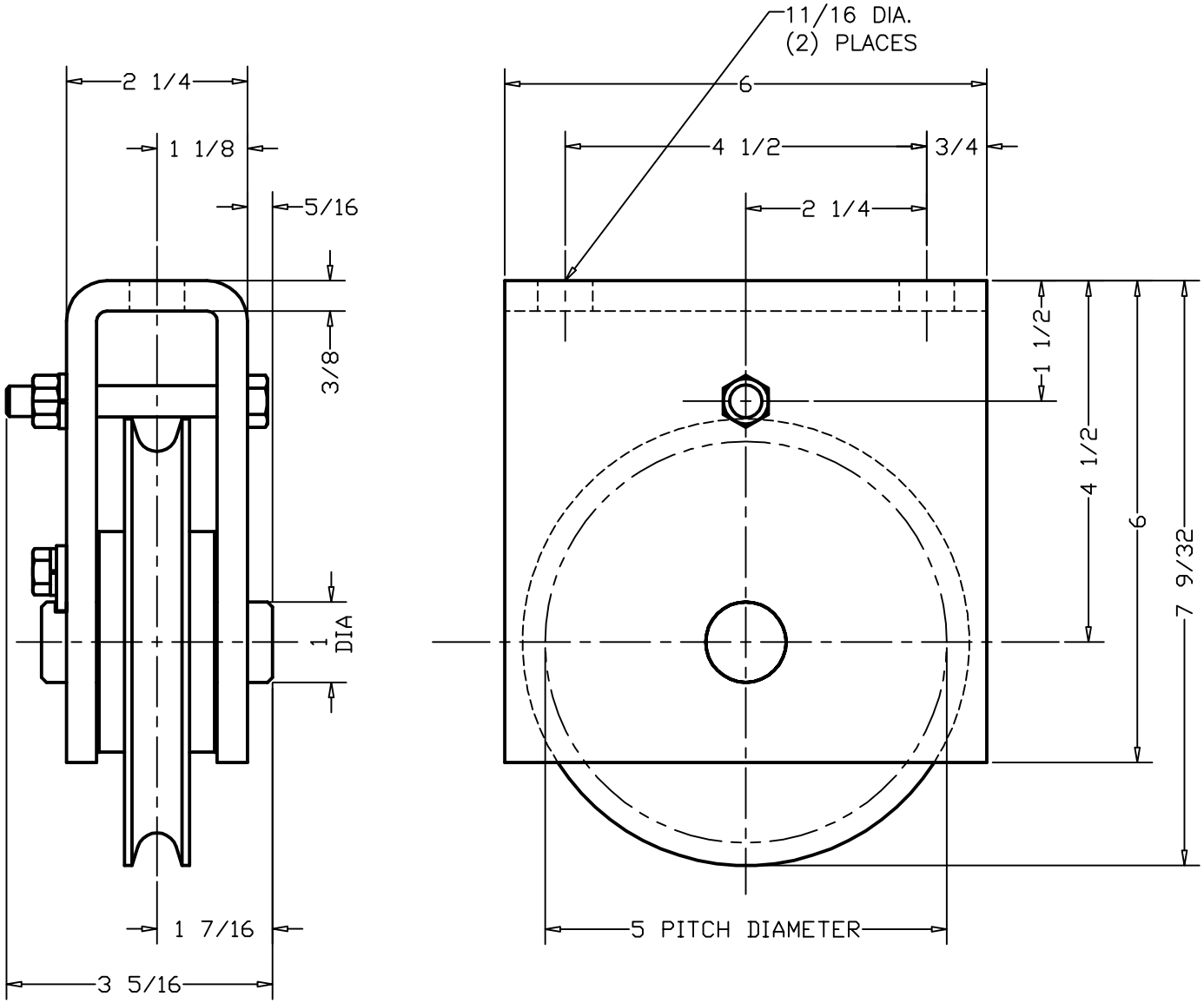


**SHEAVE SPECIFICATIONS:**

1. **WIRE ROPE:**
   FOR USE WITH 1/4" OR 5/16" DIAMETER WIRE ROPE

2. **PITCH DIAMETER**
   5" P.D.

3. **MATERIAL:**
   ☐ CAST IRON
   STANDARD OPTION

   ☐ STEEL

4. **BEARING:**
   BRONZE BEARING
   SUITABLE FOR GENERAL PURPOSE MATERIAL HANDLING


ELECTROLIFT

ELECTROLIFT, INC.
204 SARGEANT AVE.
CLIFTON, NJ 07013
PH: 973-471-0204
FAX: 973-471-2814
www.electrolift.com


| REV. | ECO# | DATE | BY: |
|---|---|---|---|
| – | | | |

SHEAVE & BRACKET ASSEMBLY P
K2069

| DATE: | SCALE: | DWG SIZE: | DRAWN BY: |
|---|---|---|---|
| 2/27/08 | 1/2 | A | DR |

DRAWING NO.:
K2069-WPDF